PTR BALER & COMPACTOR

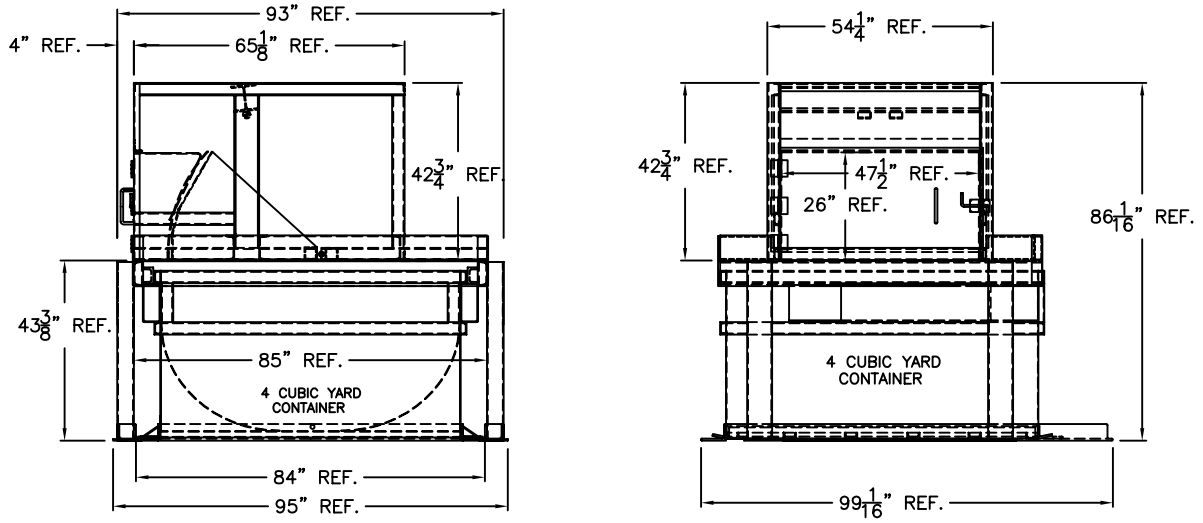

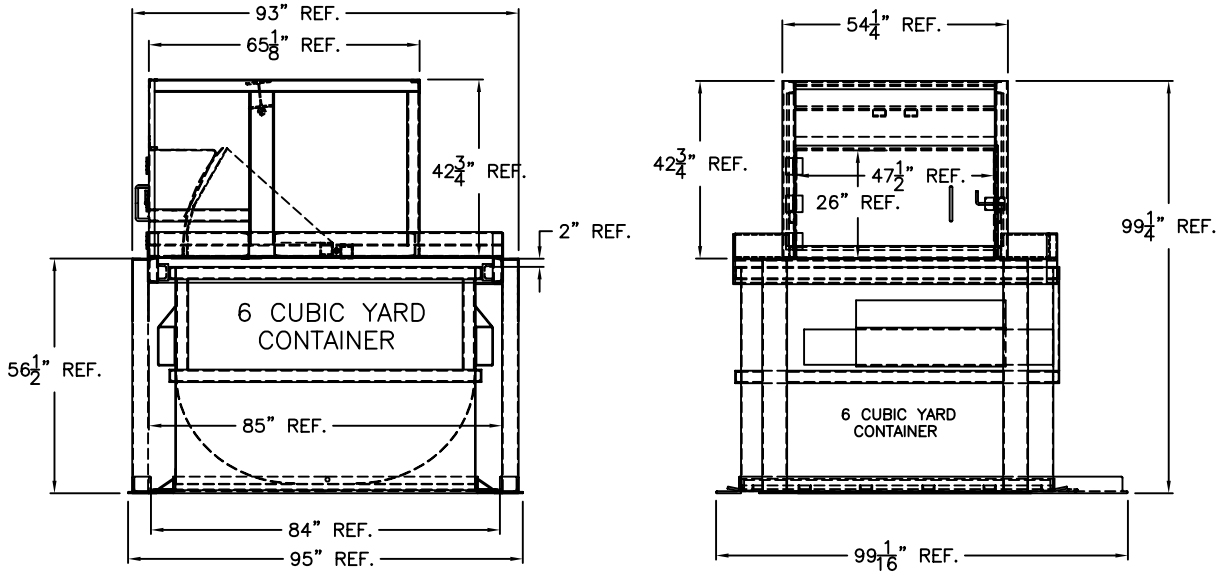

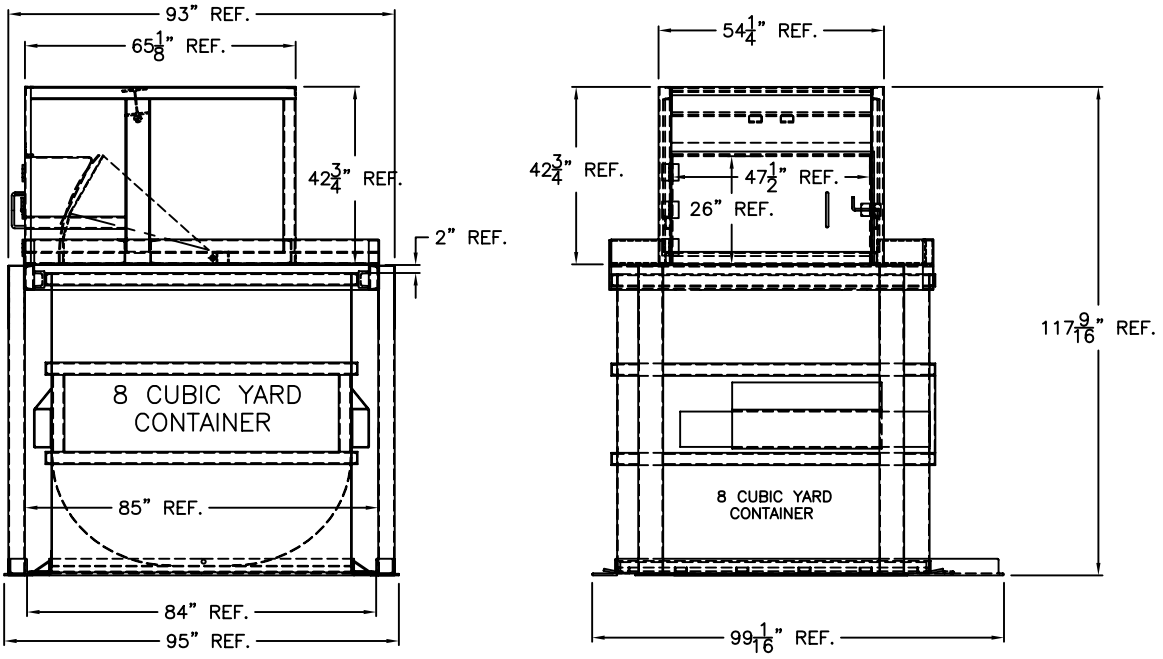

TITLE: VCP SIDE FEED VERTICAL COMPACTOR W/ 4YD, 6YD & 8YD CONT DWG. NO: AC402124